SS-18V12

LED power supply for 12 Vdc constant voltage
1.5 A (18 W) max., IP20, Built-in installation, non-dimmable
Flicker free according to IEEE 1789

Electrical data

Rated input voltage	220...240 Vac	
Range of input voltage	176...264 Vac	
Rated input voltage (DC)	198…254Vdc	
Range of input voltage (DC)	176…280Vdc	
Frequency	50/60 Hz	
Power factor (λ)	0.85 C	Full Load, 230 Vac
Input current	0.18 A max.	Full Load, 176 Vac
No-load loss	≤ 0.5 W	
Inrush current	10 A max.	Full Load, 230 Vac
Leakage current	< 0.7 mA	240 Vac
Output voltage	12 Vdc	
Output current	0…1.5 A	
Output power (nominal)	18 W max.	
Efficiency	≥ 80 %	Full Load, 230 Vac
Life time	> 30,000 h	45 °C
Dimmable	No	

Operating condition

Operating temperature range (ta)	-20...+45 °C
Max. Surface temperature (tc)	85 °C
Permitted rel. humidity	20...90 %
Protection class	II
Type of protection	IP20

Protection

Short circuit protection	Yes *	
Overload protection	Yes *	105…150%
Overvoltage protection	Yes *	>12.6 Vdc
Overheating protection	Yes *	

(*) The output shuts off and will be resumed, after problem is removed and led driver is restarted.

Standards & Certificates

Standards	EN 61347-1, EN 61347-2-13 EN 62384, EN 62493 EN 55015, EN 61547 EN 61000-3-2, EN 61000-3-3
Approval marks	CE, UKCA
RoHS compliant	Yes

Installation

Cable length, input side	160 ± 5 mm
Cable length, output side	160 ± 5 mm
Cable cross-section, input side	2 x 0,5 mm² (20 AWG)
Cable cross-section, output side	2 x 0,5 mm² (20 AWG)
Cable preparation length, input side	6 mm tinned
Cable preparation length, output side	6 mm tinned

Dimension

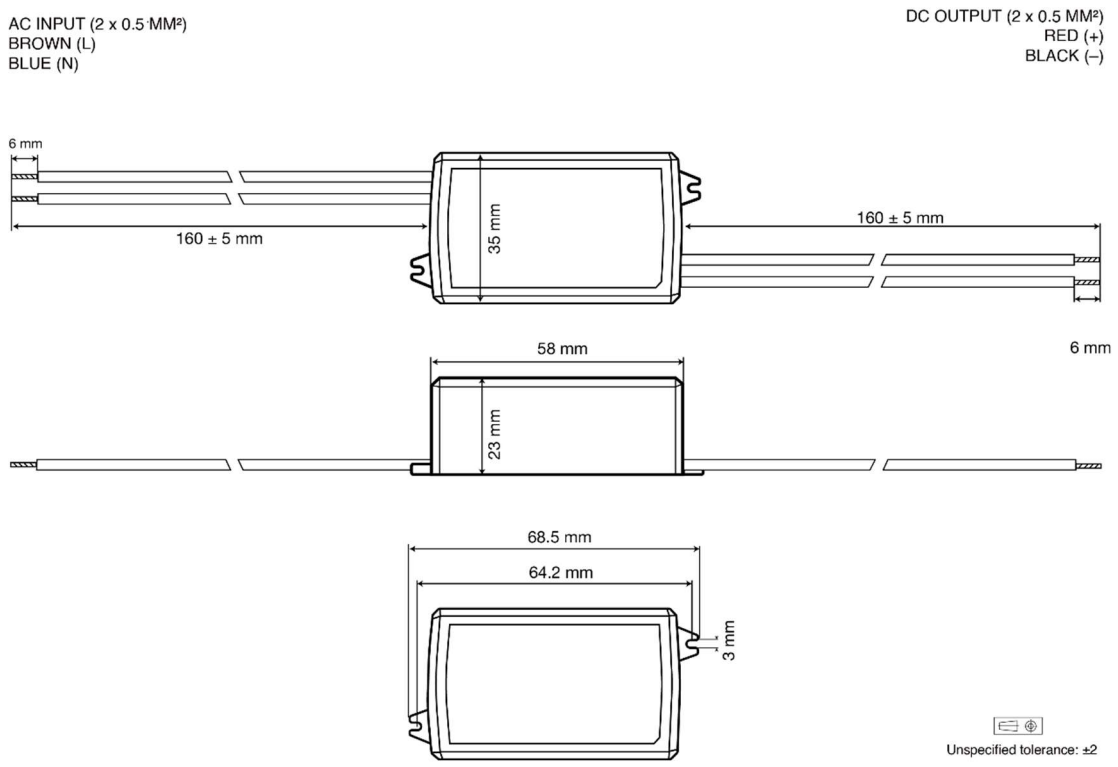

Connection

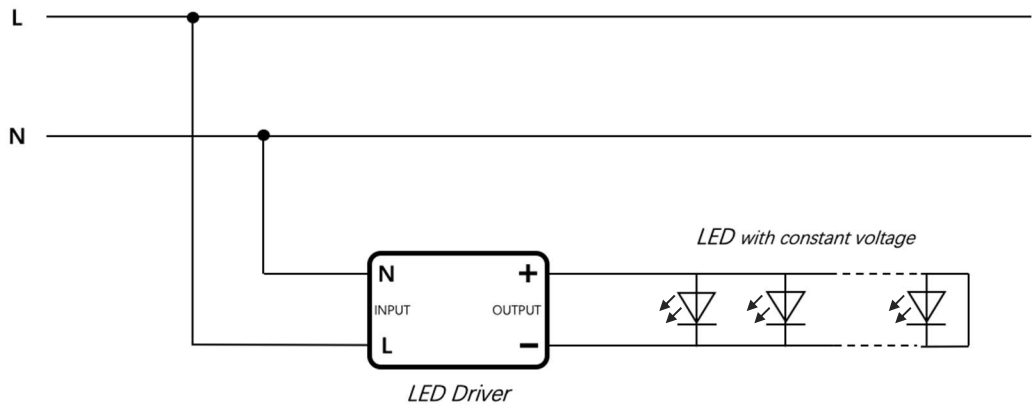

Safety Notice

	Dangerous currents flow through the body when coming into direct or indirect contact with live components. This can result in electric shock, burns or even death. Work improperly carried out on current-carrying parts can cause fires. ■ Disconnect the mains power supply prior to installation and/or disassembly! ■ Permit work on the 230 V supply system to be performed only by specialist staff.